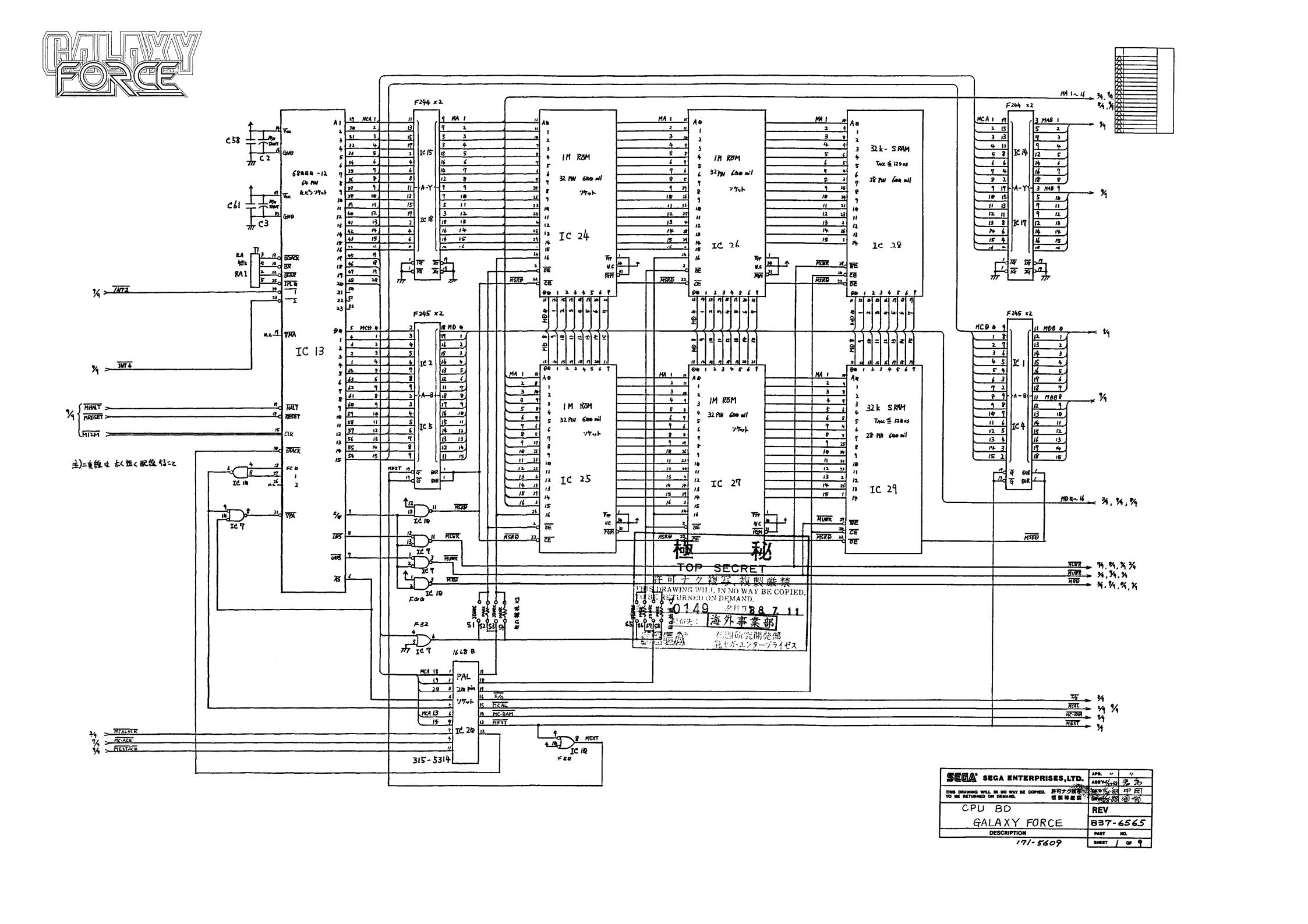
GALAXY FORCE
IC 13
IC 24
IC 25
IC 26
IC 27
IC 28
IC 29
IC 14
IC 17
IC 1
IC 4
IC 2
IC 3
IC 20
1M ROM
32k SRAM
F244 x2
F245 x2
PAL
315-5314
極秘
TOP SECRET
許可ナク複写 複製厳禁
THIS DRAWING WILL IN NO WAY BE COPIED, TO BE RETURNED ON DEMAND.
SEGA ENTERPRISES, LTD.
CPU BD
GALAXY FORCE
837-6565
171-5609

(This line has been correctly scanned. It leads to nowhere)

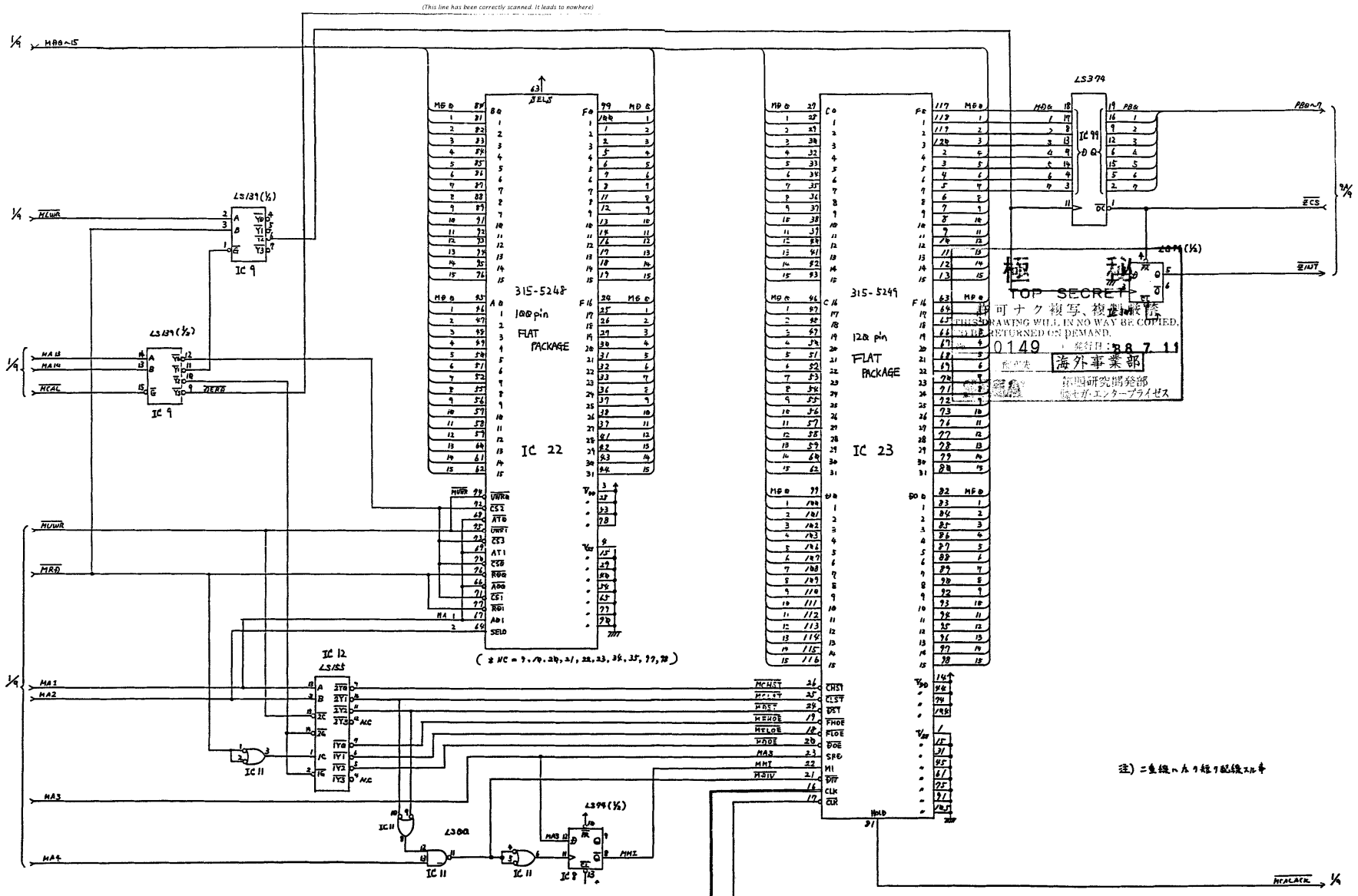

注) 二重線ハ太ク極ク配線スル事

極秘
TOP SECRET
許可ナク複写、複製禁
THIS DRAWING WILL IN NO WAY BE COPIED, RETURNED ON DEMAND.
0149
海外事業部
第四研究開発部
㈱セガ・エンタープライゼス

SEGA ENTERPRISES,LTD.	APR.	
THIS DRAWING WILL IN NO WAY BE COPIED. TO BE RETURNED ON DEMAND. 許可ナク複写 返却等厳禁	ASSY'D	
	CKD	中西
	DRWN	中西
CPU BD	REV	
GALAXY FORCE	837-6565	
DESCRIPTION	PART NO.	
171-5609	SHEET 2 OF 9	

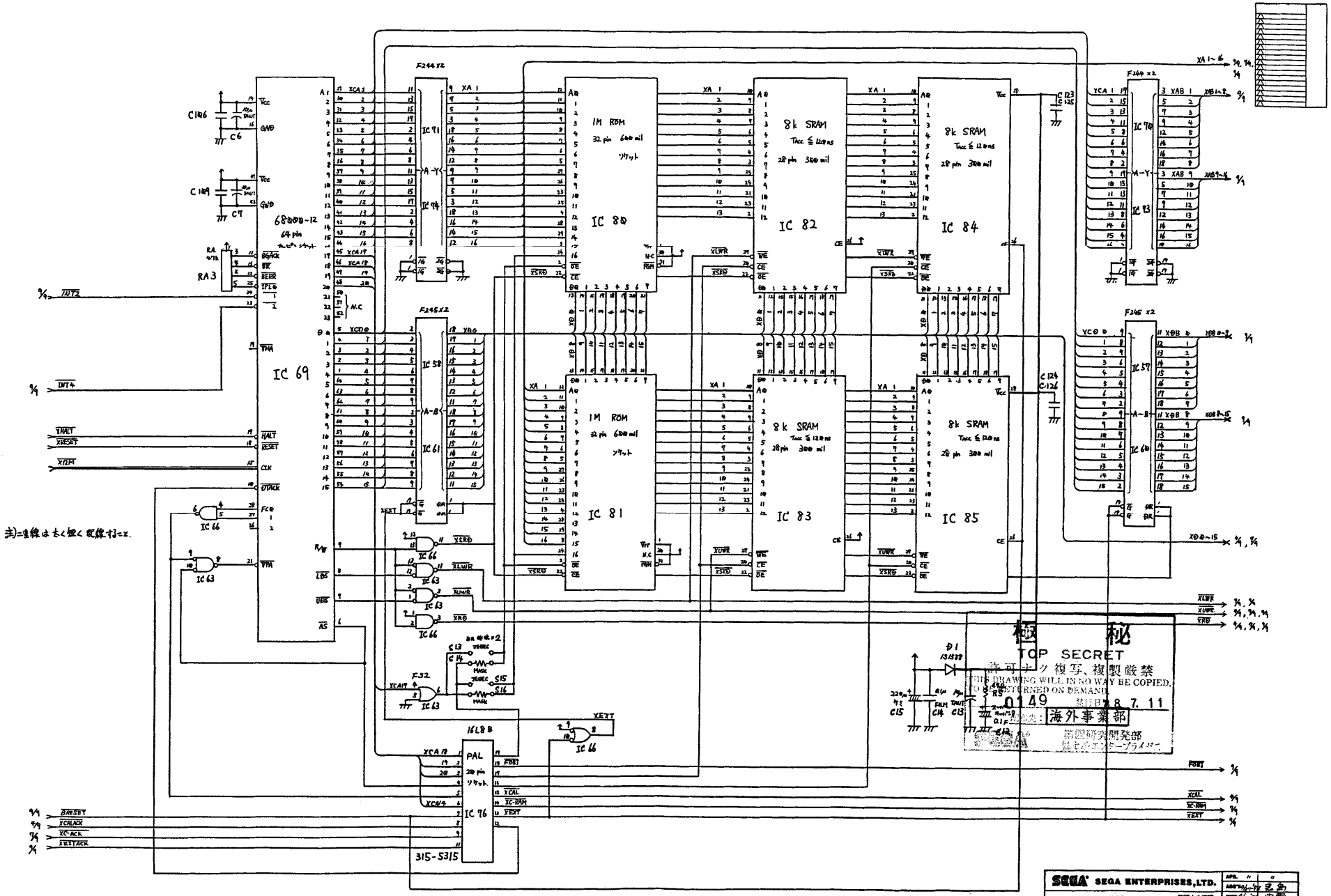
IC 69
68000-12
64 pin
IC 80
1M ROM
32 pin 600 mil
ソケット
IC 81
1M ROM
32 pin 600 mil
ソケット
IC 82
8k SRAM
Tacc ≦ 120ns
28 pin 300 mil
IC 83
8k SRAM
Tacc ≦ 120ns
28 pin 300 mil
IC 84
8k SRAM
Tacc ≦ 120ns
28 pin 300 mil
IC 85
8k SRAM
Tacc ≦ 120ns
28 pin 300 mil
IC 71
IC 74
IC 58
IC 61
IC 73
IC 57
IC 60
IC 76
PAL
20 pin
ソケット
16L8B
315-5315
IC 66
IC 63
IC 13
F244 x2
F245 x2
F364 x2
F32
RA 3
C 126
C 6
C 129
C 7
C 123
C 125
C 124
C 126
D1
C 13
C 14
C 15
S 15
S 16
XA 1~16
XAB 1~8
XAB 9~16
XDB 0~8
XDB 0~15
XLWR
XUWR
XRD
XERD
XCS
XCAIT
XEXT
FBST
XCAL
XC-RAM
XCALACK
XC-ACK
XRETACK
XBRSET
INT2
INT4
XHALT
XRESET
XTIM
XDTACK
XIACK
XBERR
XIPL0
XIPL1
XIPL2
XVPA
XFC0
XFC1
XFC2
XVMA
R/W
LDS
UDS
AS
XCA 1
XCA 19
XCD 0
XCD 15
XA 1
XDB
XRS
XCS
XERD
XLWR
XUWR
XRD
XEXT
XCAIT
XCAL
XC-RAM
XCALACK
XC-ACK
XRETACK
XBRSET
XCA 19
XCA 4
XCD 0
XCD 15
XDB 0~15
XA 1~16
XAB 1~8
XAB 9~16
XDB 0~8
XDB 0~15
注)=は線は太く短く配線する=x.
極秘
TOP SECRET
許可なく複写、複製厳禁
THIS DRAWING WILL IN NO WAY BE COPIED, TO BE RETURNED ON DEMAND
T-0149
海外事業部
SEGA ENTERPRISES, LTD.
THIS DRAWING WILL IN NO WAY BE COPIED. TO BE RETURNED ON DEMAND.
CPU BD
GALAXY FORCE
DESCRIPTION
171-5609
REV
837-6565
PART NO.
SHEET 3 OF 9

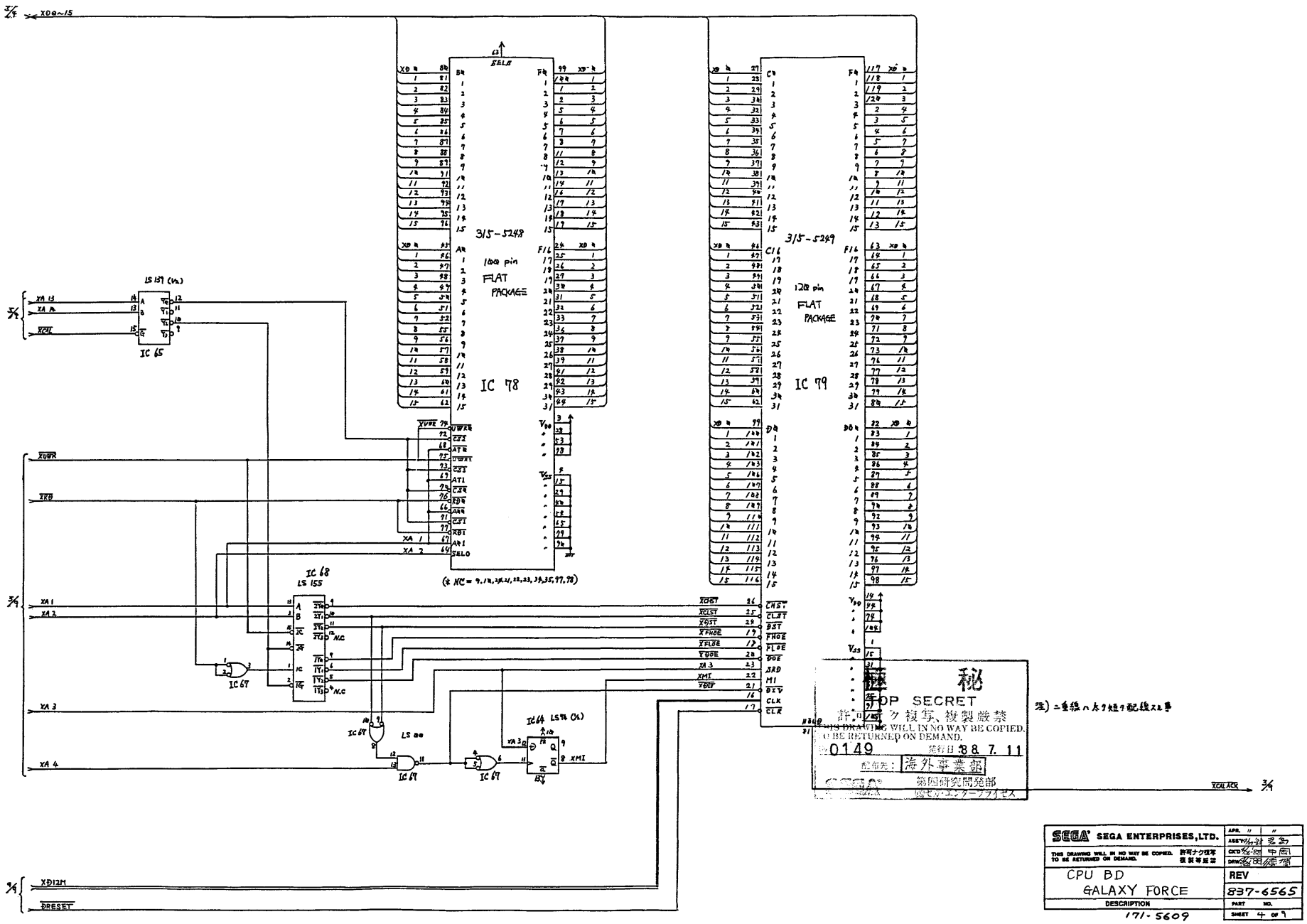
XD0~15
IC 65
IC 78
315-5249
100 pin
FLAT
PACKAGE
IC 79
120 pin
IC 68
LS 155
IC 67
LS 00
IC 69
IC 64
LS 74
XCALACK
XD12M
XRESET
XMI
(* NC = 9,12,28,21,22,23,33,35,37,38)
秘
TOP SECRET
許可なく複写、複製厳禁
THIS DRAWING WILL IN NO WAY BE COPIED.
TO BE RETURNED ON DEMAND.
0149
発行日 '88 7. 11
配布先：海外事業部
第四研究開発部
注）二重線ハ太ク短ク配線スル事
SEGA SEGA ENTERPRISES,LTD.
CPU BD
GALAXY FORCE
837-6565
171-5609
REV
SHEET 4 OF 7

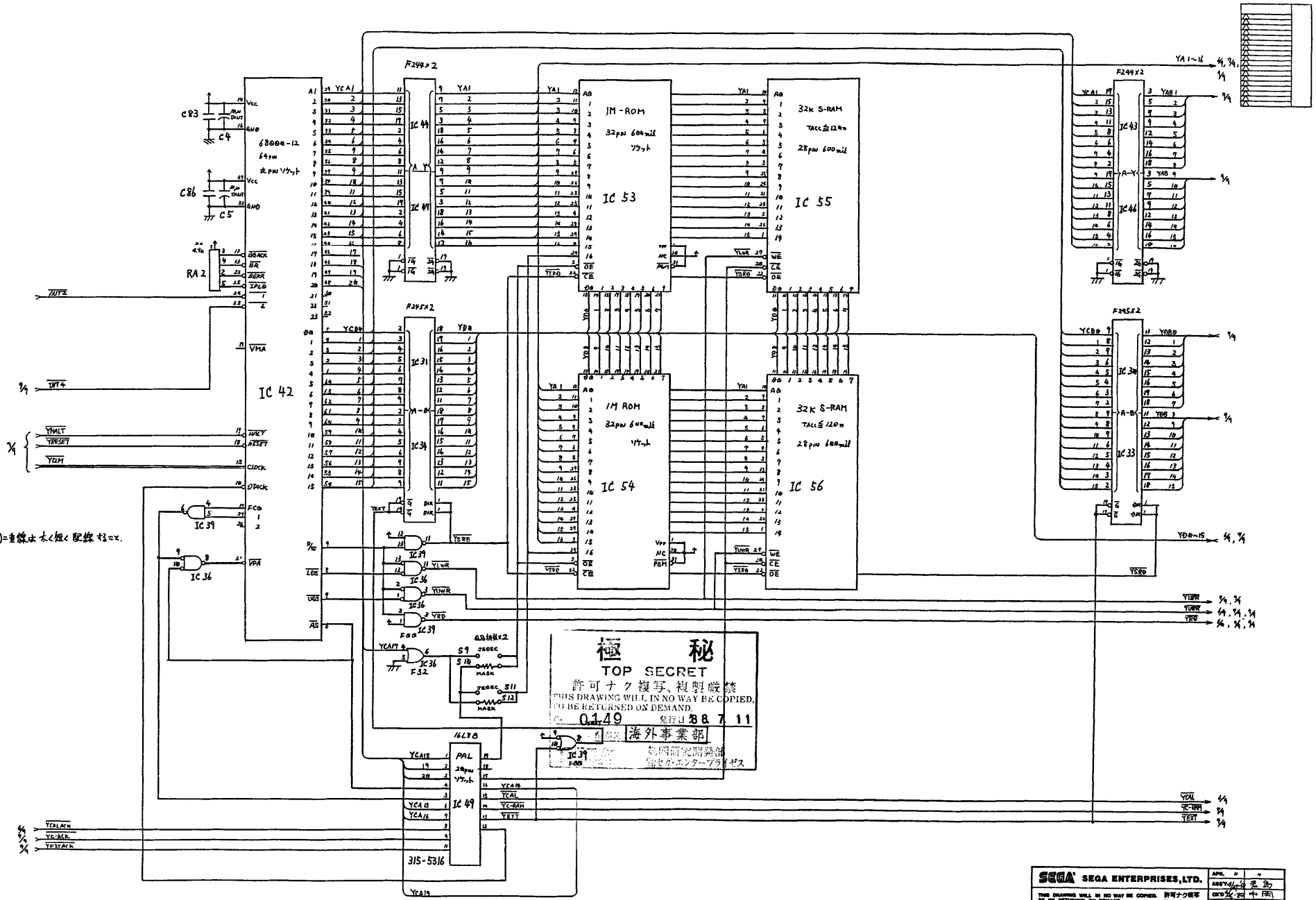

注)=重線は太く短く配線すること。

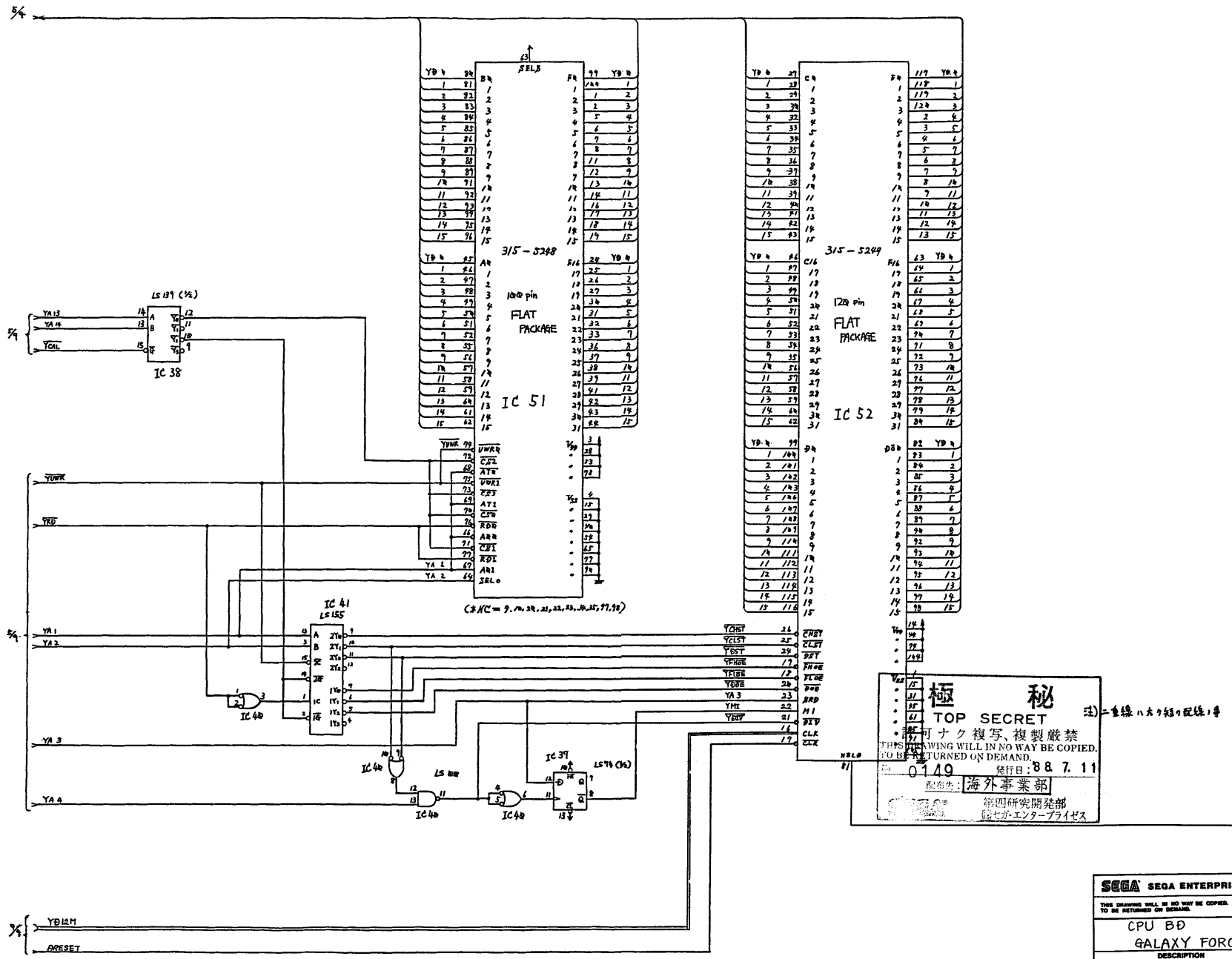

SEGA SEGA ENTERPRISES, LTD.	APR. 4 11
THIS DRAWING WILL IN NO WAY BE COPIED. TO BE RETURNED ON DEMAND. 許可ナク複写 複製等禁ず	ASSY. 4/4 吉島
	CKD 4-22 中間
	DRW 4-22 須賀
CPU BD	REV
GALAXY FORCE	837-6565
DESCRIPTION	PART NO.
171-5609	SHEET 6 OF 9

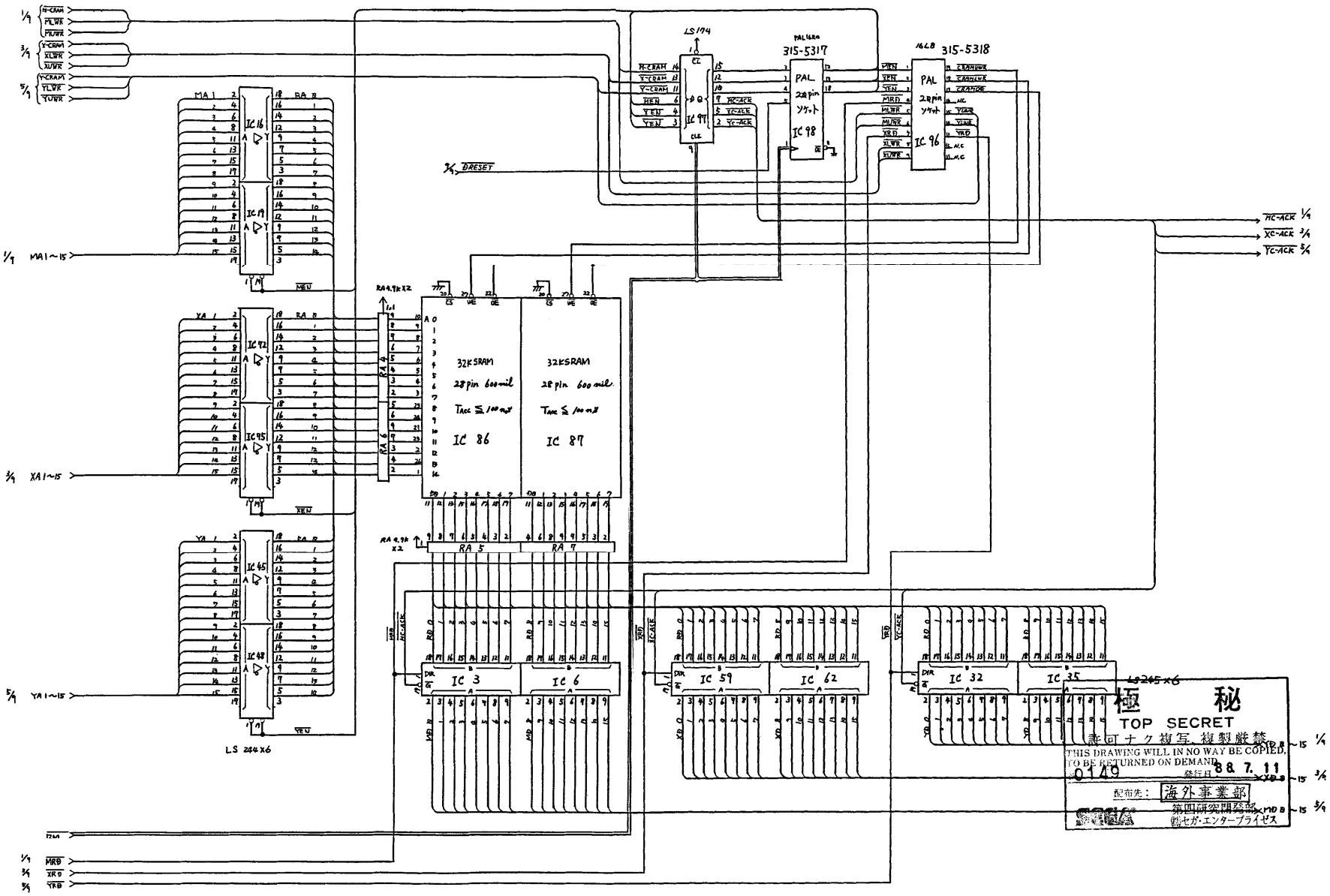

SEGA SEGA ENTERPRISES,LTD.	APR. 〃	〃
THIS DRAWING WILL IN NO WAY BE COPIED. TO BE RETURNED ON DEMAND. 許可ナク複写 複製禁厳禁	ASST 4/27-88	島
	CKD 5/26-88	中岡
	DRW 5/26-88	須藤
CPU BD	REV	
GALAXY FORCE	837-6565	
DESCRIPTION	PART NO.	
171-5609	SHEET 9 OF 9	

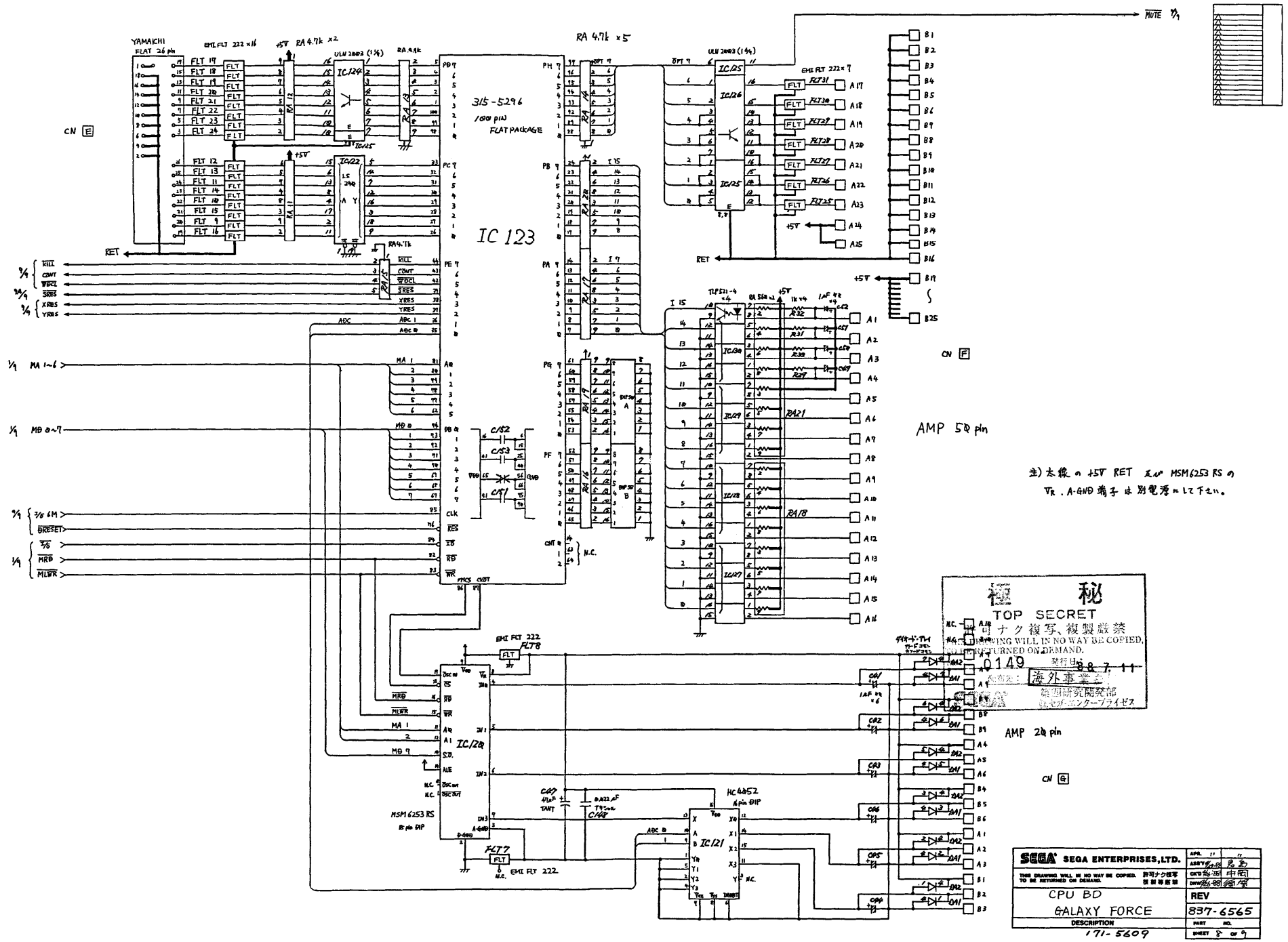
YAMAICHI
FLAT 26 pin
CN E
EMI FLT 222 ×16
RA 4.7k ×2
ULN 2003 (1/4)
IC124
IC125
IC122
RA 4.7k ×5
315-5296
100 pin
FLAT PACKAGE
IC 123
RET
MUTE
IC126
IC129
IC128
IC127
IC130
TLP521-4 ×4
RA 560 ×3
1k ×4
1AF 4k ×4
RA21
RA18
CN F
AMP 50 pin
注) 太線の +5V RET 及び MSM6253 RS の VR . A-GND 端子は別電源にして下さい。
EMI FLT 222
FLT8
FLT7
IC128
MSM 6253 RS
18 pin DIP
IC121
HC 4052
16 pin DIP
CN G
AMP 20 pin
極秘
TOP SECRET
無断複写、複製厳禁
THIS DRAWING WILL IN NO WAY BE COPIED, SOLD OR RETURNED ON DEMAND.
0149
88 7 11
海外事業
開発部
SEGA ENTERPRISES, LTD.
CPU BD
GALAXY FORCE
837-6565
171-5609
REV
SHEET 8 OF 9

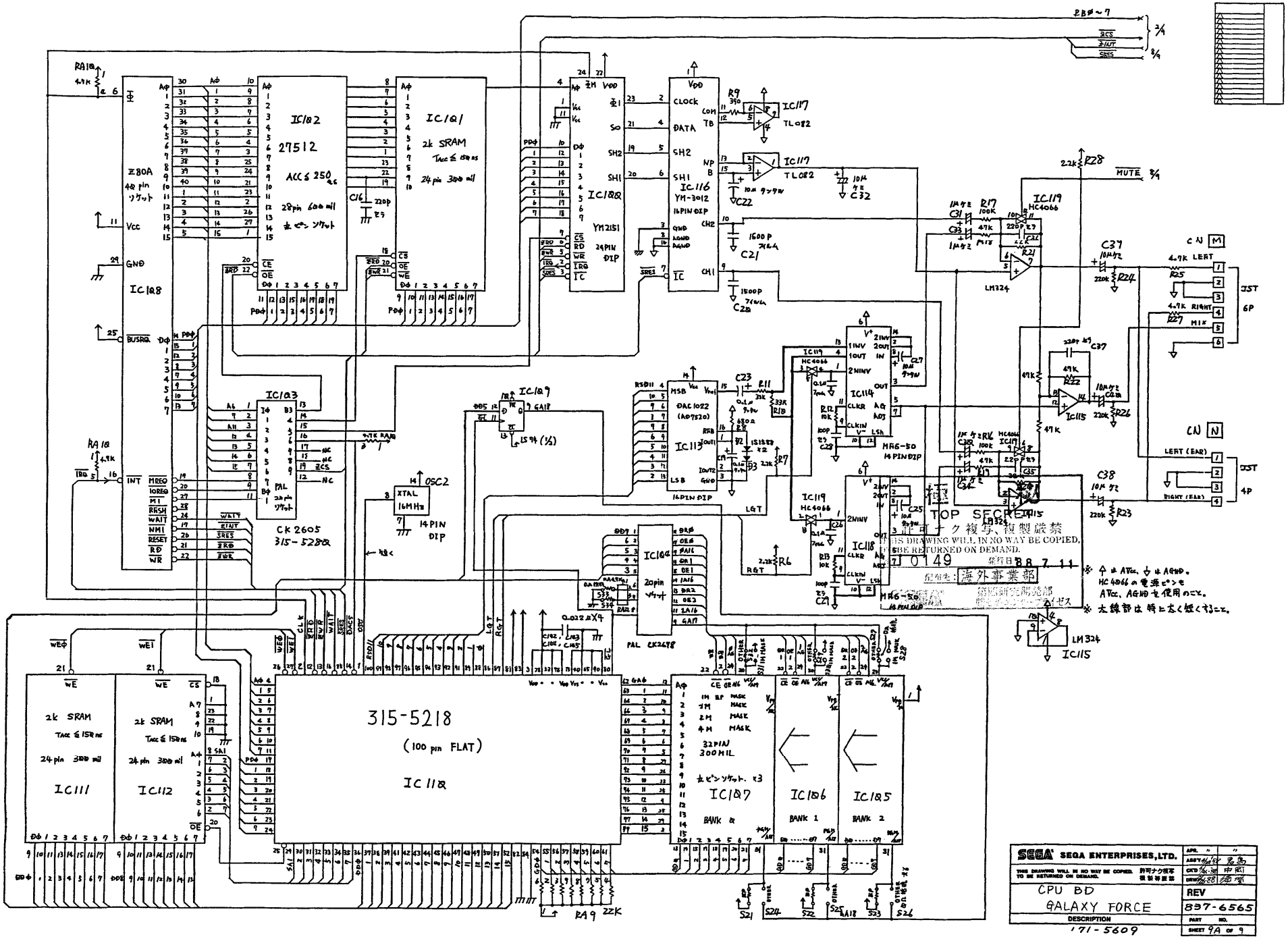
IC102
27512
ACC≦250ns
IC101
2k SRAM
IC108
Z80A
IC103
CK 2605
315-5280
IC109
IC104
PAL CK2478
IC116
YM-3012
IC118
YM2151
IC117
TL082
IC119
HC4066
IC114
DAC 1022
IC113
MB6-50
IC115
LM324
IC111
2k SRAM
IC112
2k SRAM
315-5218
(100 pin FLAT)
IC110
IC107
BANK 0
IC106
BANK 1
IC105
BANK 2
TOP SECRET
MUTE
CN M
CN N
LEFT
RIGHT
MIX
LEFT (EAR)
RIGHT (EAR)
JST 6P
JST 4P
SEGA ENTERPRISES, LTD.
CPU BD
GALAXY FORCE
837-6565
171-5609
REV
SHEET 9A OF 9

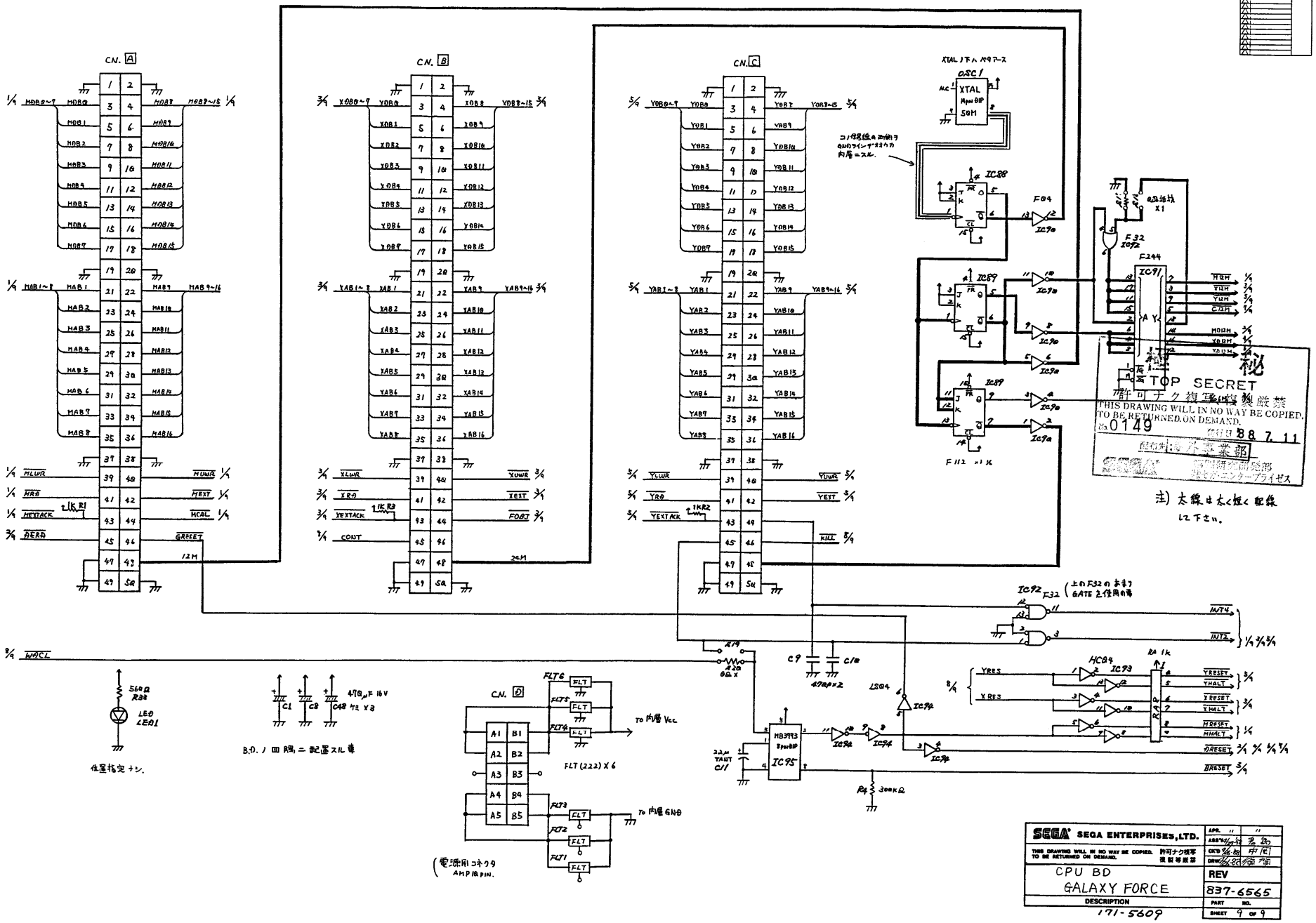
CN. A
CN. B
CN. C
CN. D
OSC 1
XTAL
IC88
IC89
IC90
IC91
IC92
IC93
IC94
IC95
F04
F32
F244
F112
HC84
LS04
HB3793
MDB0~7
MDB8~15
MAB1~8
MAB9~16
XDB0~7
XDB8~15
XAB1~8
XAB9~16
YDB0~7
YDB8~15
YAB1~8
YAB9~16
MLWR
MRD
MEXTACK
MEXT
MCAL
MRESET
12M
24M
XLWR
XRD
XEXTACK
XEXT
XOBJ
COUT
YLWR
YRD
YEXTACK
YEXT
KILL
MUWR
YUWR
MHCL
INT4
INT2
YRES
XRES
YRESET
YHALT
XRESET
XHALT
MRESET
MHALT
ARESET
BRESET
LED
LED1
R33
C1
C2
C48
FLT
TO 内層 Vcc
TO 内層 GND
FLT (222) X 6
(電源用コネクタ AMP 18 PIN.
位置指定ナシ.
B.D. ノ四隅ニ配置スル事
注) 太線は太く短く配線して下さい.
TOP SECRET
THIS DRAWING WILL IN NO WAY BE COPIED.
TO BE RETURNED ON DEMAND.
No. 0149
88 7. 11
SEGA ENTERPRISES, LTD.
THIS DRAWING WILL IN NO WAY BE COPIED. 許可ナク複写 複製等厳禁
TO BE RETURNED ON DEMAND.
CPU BD
GALAXY FORCE
DESCRIPTION
171-5609
REV
837-6565
PART NO.
SHEET 9 OF 9

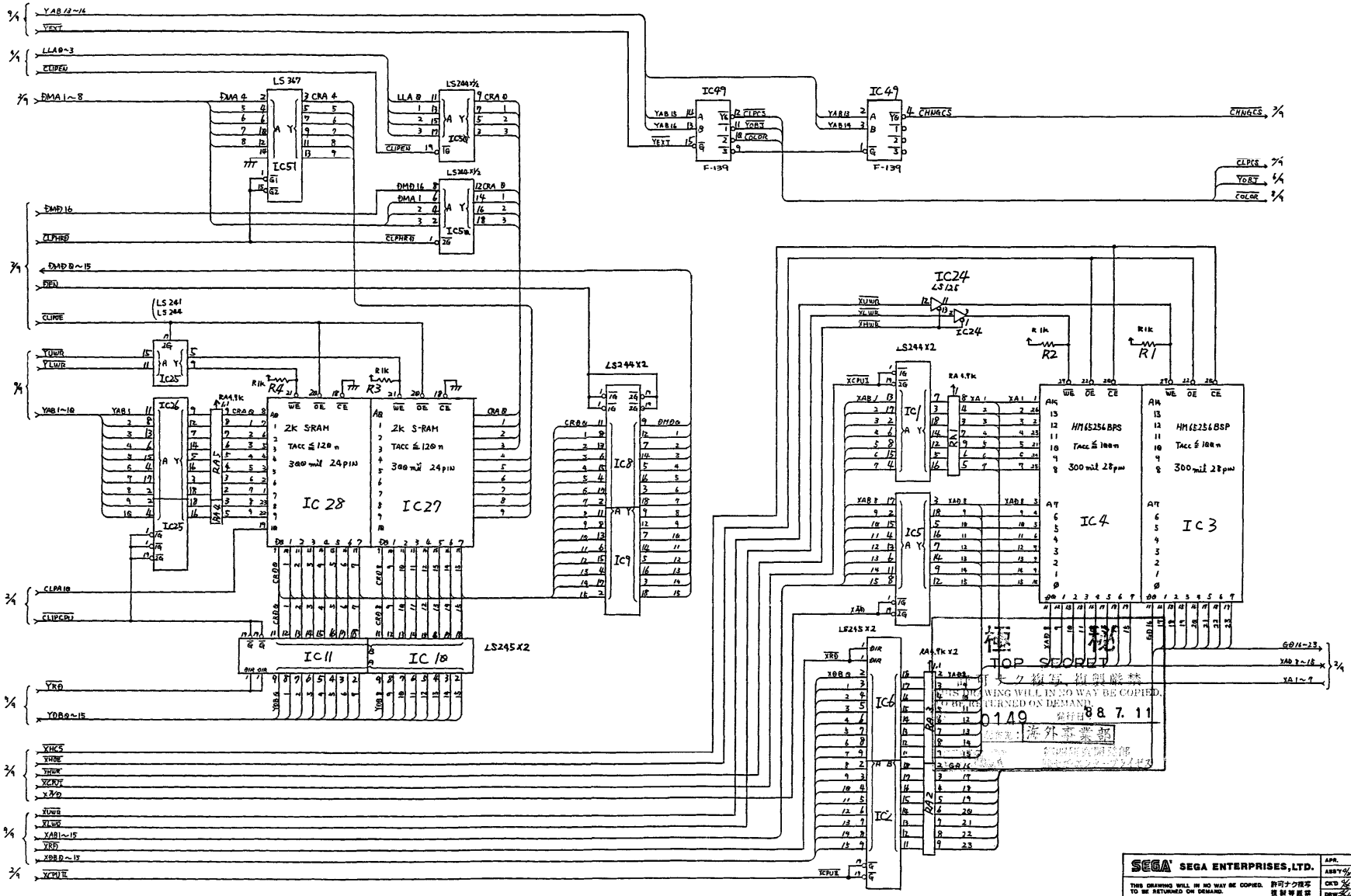

極秘
TOP SECRET
許可なく複写、複製厳禁
THIS DRAWING WILL IN NO WAY BE COPIED, TO BE RETURNED ON DEMAND.
0149 88. 7. 11
海外事業部

SEGA ENTERPRISES, LTD.	APR. 11 11	
THIS DRAWING WILL IN NO WAY BE COPIED. TO BE RETURNED ON DEMAND. 許可なく複写 複製厳禁	ASBY	
	CKD	
	DRW	
VIDEO BD	REV	
GALAXY FORCE	837-6566	
DESCRIPTION	PART NO.	
171-5610	SHEET 1 OF X	

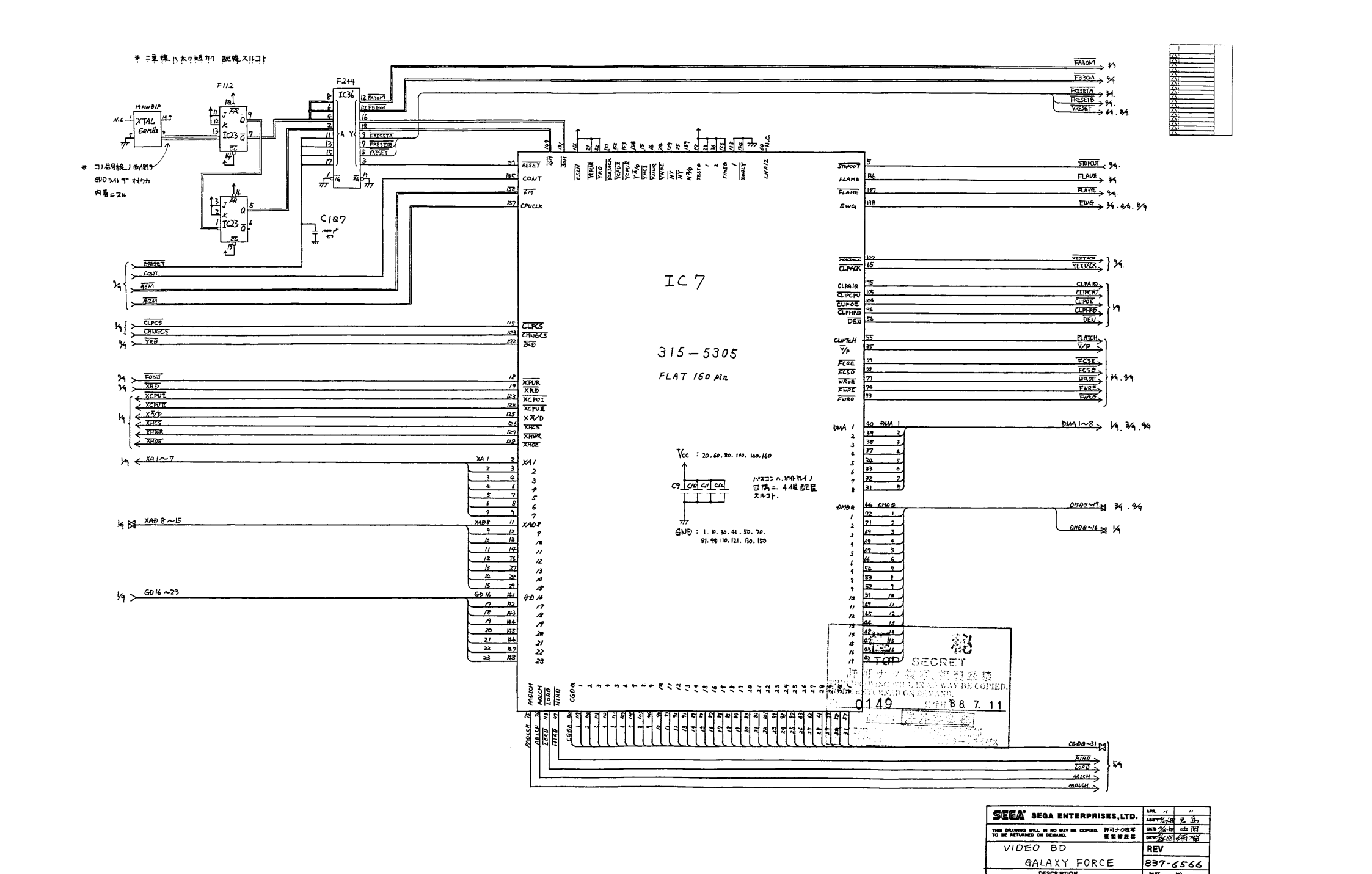
* 二重線ハ太ク短カク 配線スルコト
14PIN DIP
XTAL 6MHz
F112
IC23
F244
IC36
C187
IC 7
315-5305
FLAT 160 pin
Vcc : 20.60.80.100.160.160
C9 C10 C11 C12
バスコンハ、マトリクス状ノ四隅ニ4個配置スルコト.
GND : 1.10.30.41.50.70.
81.90 110.121.130.150
FB30M
FRESETA
FRESETB
VRESET
RESET
COUT
CPUCLK
STDPOUT
FLAME
EWG
VEXTACK
CLPACK
CLPAIR
CLIPCPU
CLIPOE
CLPHAD
DEN
PLATCH
V/P
FCSE
FCS0
WROE
FWRE
FWR0
DMA 1~8
DMD0~17
DMD0~16
CLPCS
CHUGCS
YRD
XCPUR
XRD
XCPUI
XCPUII
XA/D
XHCS
XHWR
XHOE
XA1~7
XAD8~15
GD16~23
CGD0~31
HTRD
LORD
ADLCH
MDLCH
SECRET
TOP
0149
88. 7. 11
SEGA ENTERPRISES,LTD.
THIS DRAWING WILL IN NO WAY BE COPIED. TO BE RETURNED ON DEMAND.
VIDEO BD
GALAXY FORCE
DESCRIPTION
171-5610
REV
837-6566
PART NO.
SHEET 2 OF X

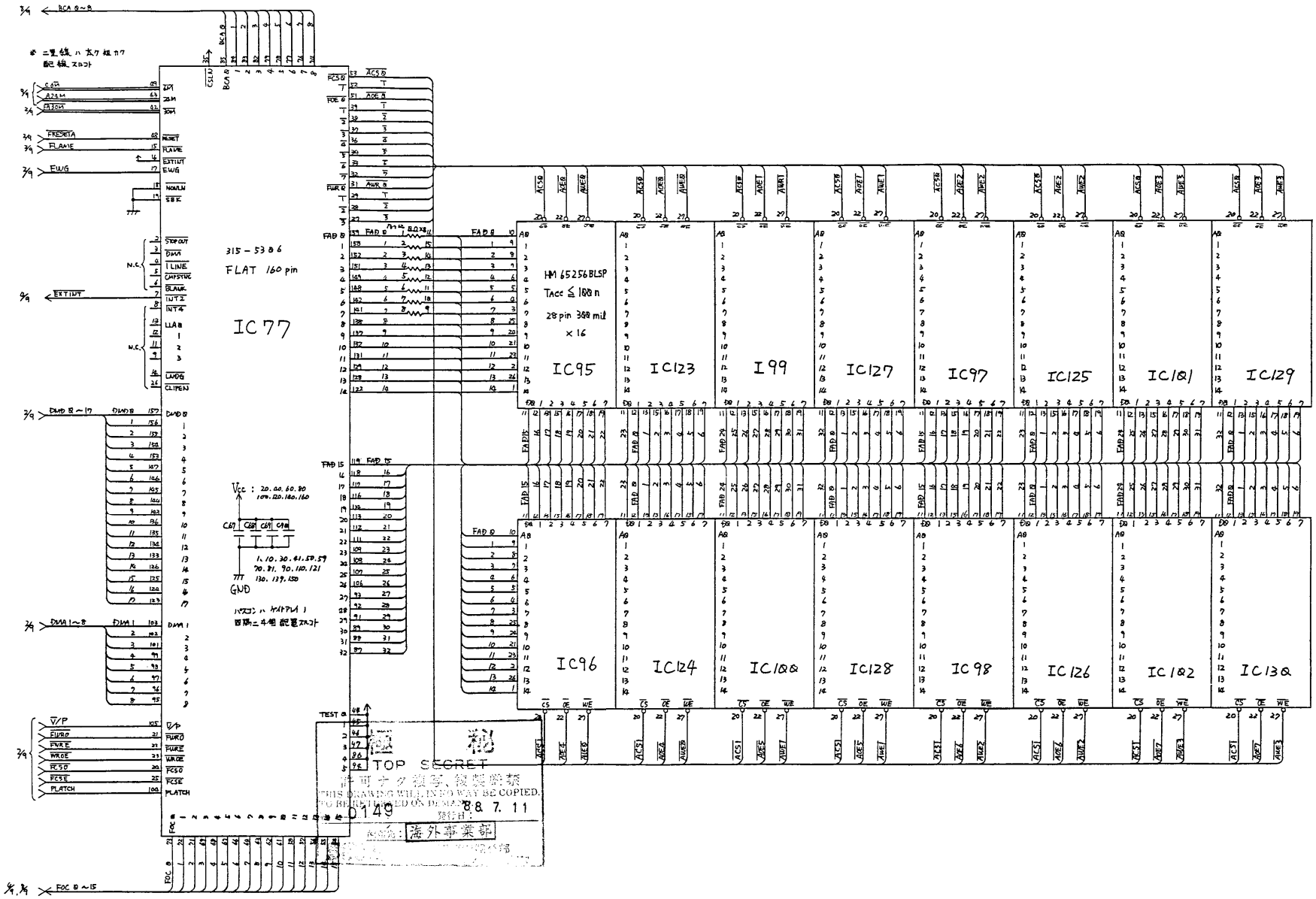

SEGA ENTERPRISES,LTD.	APR. " "
THIS DRAWING WILL IN NO WAY BE COPIED. TO BE RETURNED ON DEMAND. 許可ナク複写 複製禁禁	DRN 中
VIDEO BD	REV
GALAXY FORCE	837-6566
DESCRIPTION	PART NO.
171-5610	SHEET 3 OF X

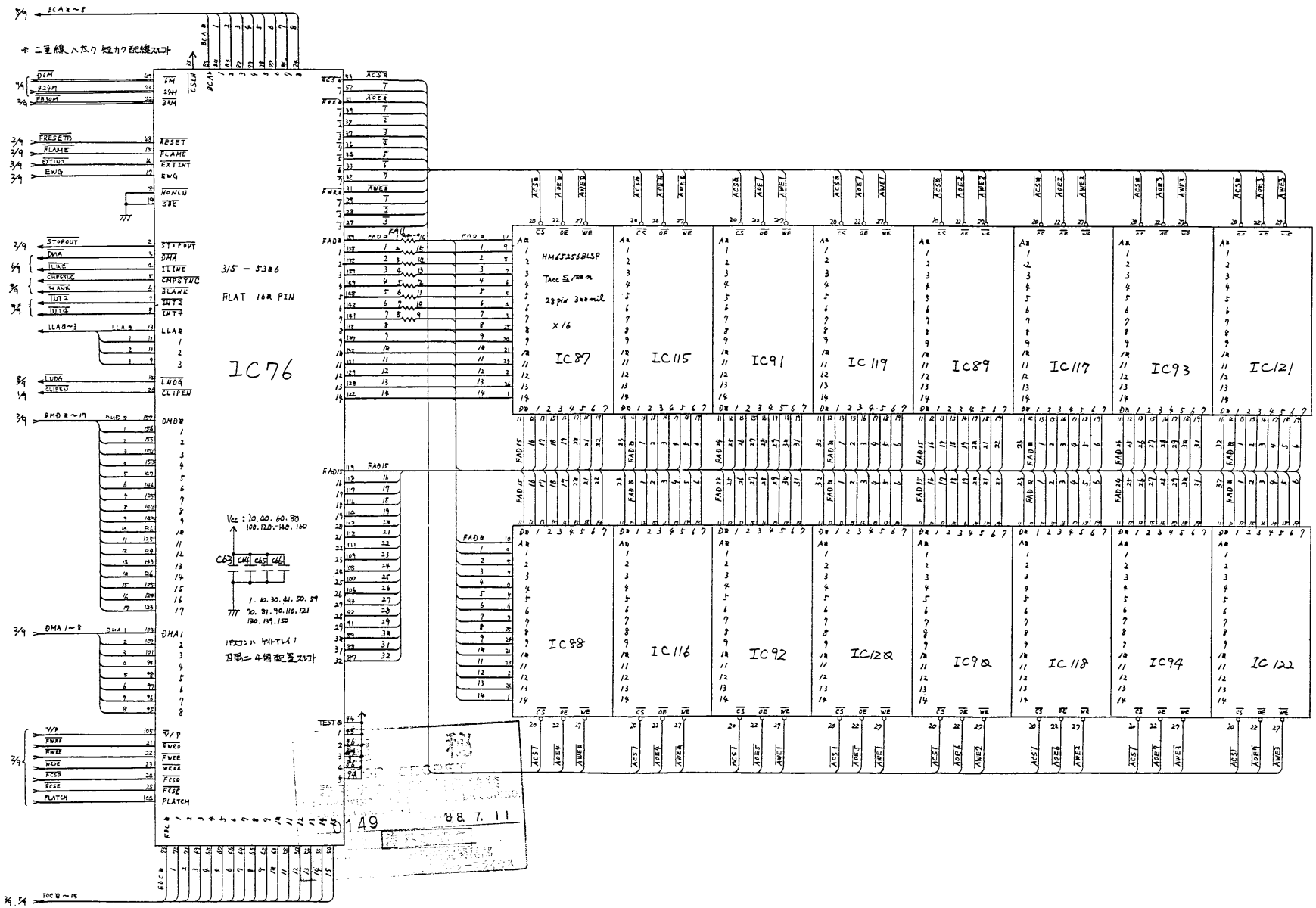

SEGA SEGA ENTERPRISES,LTD.	APR.		
	ASSY		
THIS DRAWING WILL IN NO WAY BE COPIED. TO BE RETURNED ON DEMAND. 許可なく複写 返却要求	CKD		
	DRW		
VIDEO BD	REV		
GALAXY FORCE	837-6566		
DESCRIPTION	PART NO.		
171-5610	SHEET 4 OF X		

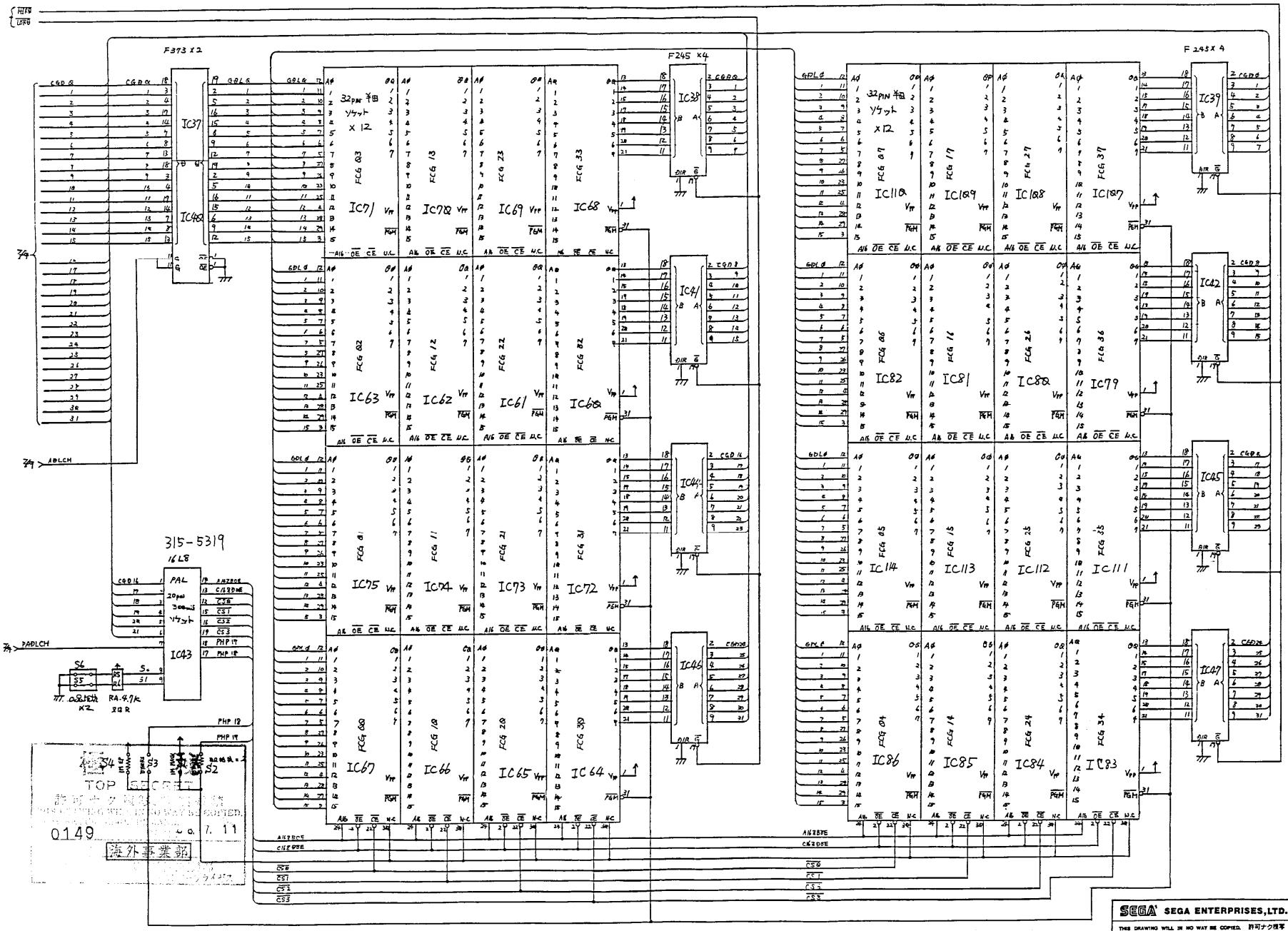
F373 X2
F245 X4
F245 X4
32PIN ソケット X12
32PIN ソケット X12
IC37
IC48
IC38
IC39
IC71
IC72
IC69
IC68
IC41
IC42
IC63
IC62
IC61
IC60
IC44
IC45
IC75
IC74
IC73
IC72
IC46
IC47
IC67
IC66
IC65
IC64
IC118
IC119
IC108
IC107
IC82
IC81
IC80
IC79
IC114
IC113
IC112
IC111
IC86
IC85
IC84
IC83
315-5319
16L8
PAL
20pin
300mil
ソケット
IC43
S6
S5
RA-4.7K
8コR
S3
S2
TOP SECRET
0149
海外事業部
SEGA ENTERPRISES,LTD.
THIS DRAWING WILL IN NO WAY BE COPIED. 許可なく複写 TO BE RETURNED ON DEMAND. 返却を要求
VIDEO BD
GALAXY FORCE
DESCRIPTION
171-5610
REV
837-6566
PART NO.
SHEET 5 OF X

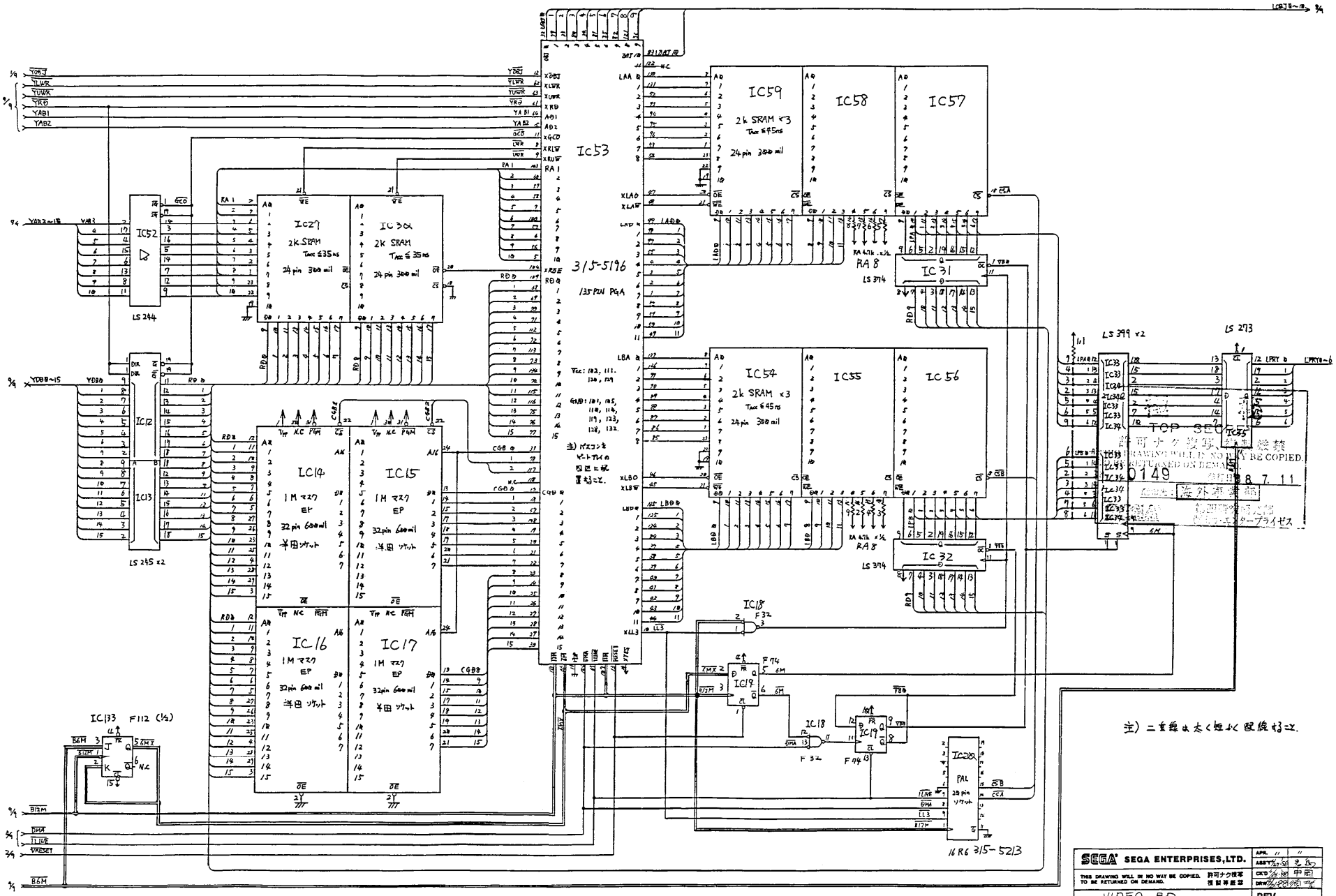

注) 二重線は太く短く配線すること。

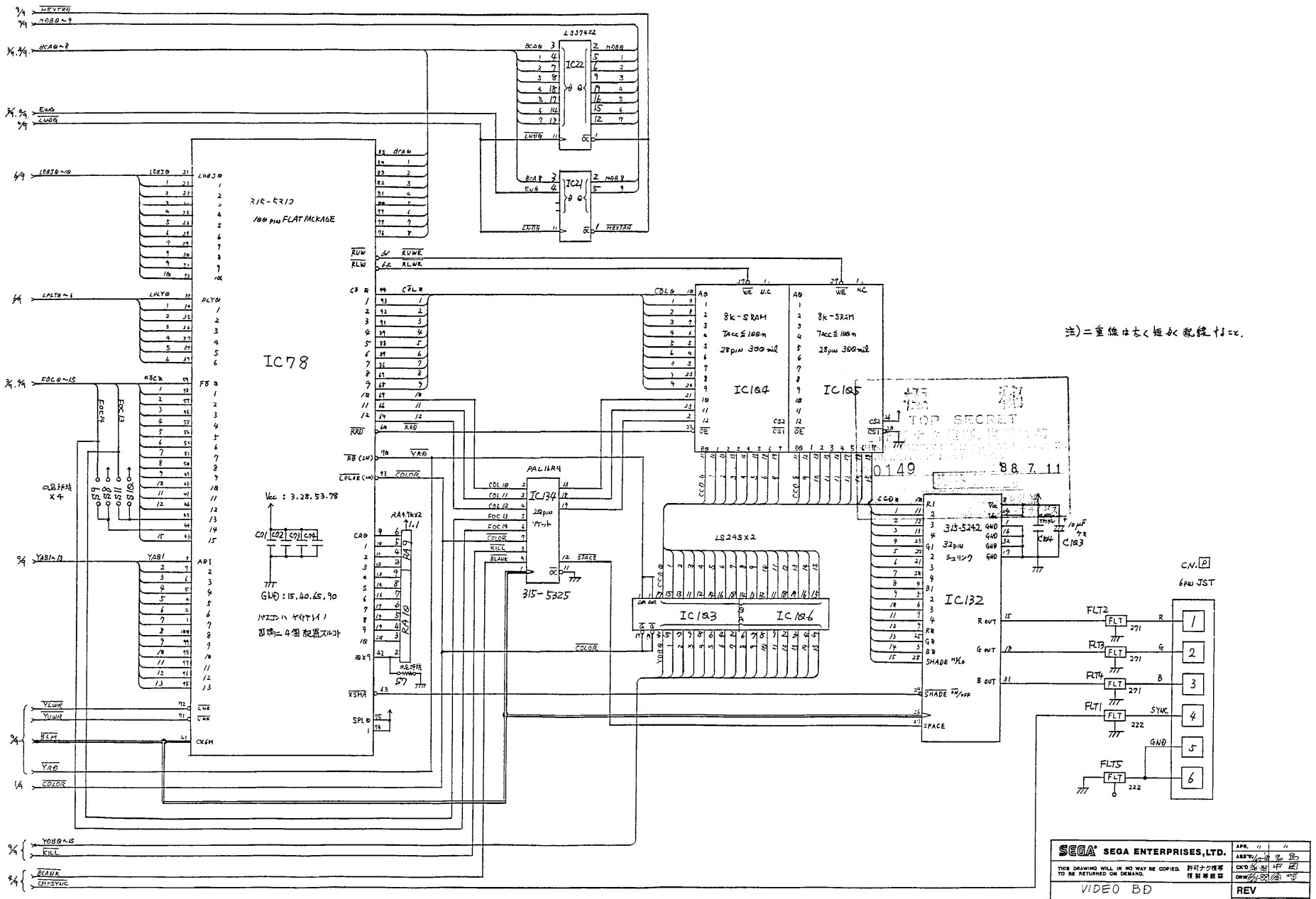
IC78
ミツビシ-ヒタマリ
100 pin FLAT PACKAGE
IC22
IC21
LS374X2
IC184
IC185
8K-SRAM
TACC≦100n
28pin 300mil
IC134
PAL16R4
28pin ソケット
315-5325
IC183
IC186
LS245X2
IC132
315-5242
32pin
SHADE MODE
SPACE
RA9.1kx2
RA10
Vcc : 3.28,53.78
GND : 15,40,65,90
マスコンハ ケイサトイイ
回路ニ4個配置スルコト
注)二重線は太く短く配線すること。
TOP SECRET
0149
88.7.11
CN.P
6PIN JST
FLT2
FLT3
FLT4
FLT1
FLT5
SYNC
GND
SEGA ENTERSTRISES,LTD.
THIS DRAWING WILL IN NO WAY BE COPIED. TO BE RETURNED ON DEMAND.
VIDEO BD
GALAXY FORCE
DESCRIPTION
171-5610
REV
837-6566
PART NO.
SHEET 7 OF X

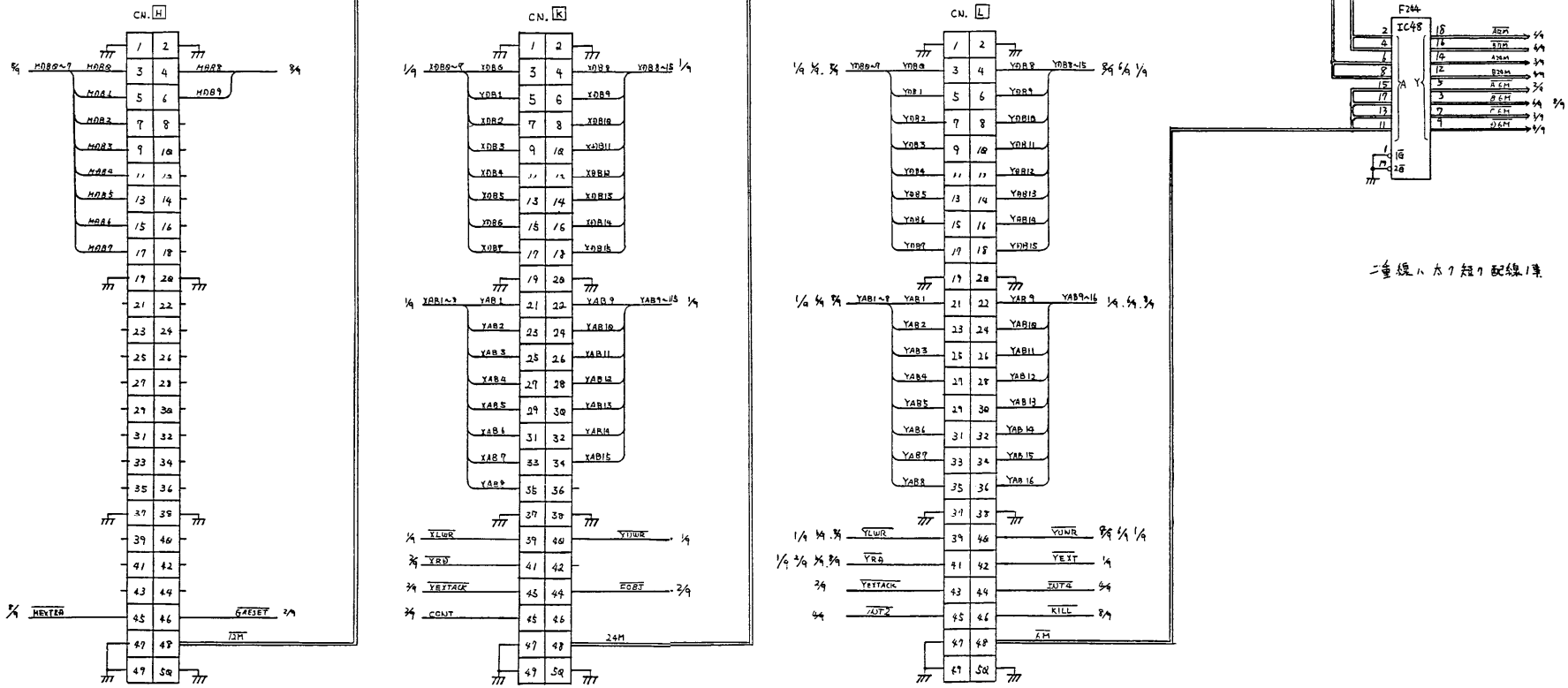

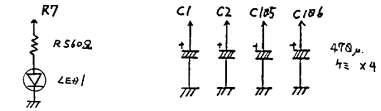

仕様指定ナシ

BDノ回路ニ配置スル事

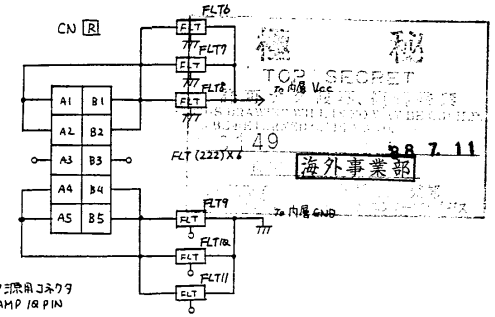

機密
TOP SECRET
49
88 7. 11
海外事業部

SEGA ENTERPRISES,LTD.	APR.	
	ASSY	
THIS DRAWING WILL IN NO WAY BE COPIED. TO BE RETURNED ON DEMAND. 許可ナク複写 複製等厳禁	CKD	
	DRW	
VIDEO BD	REV	
GALAXY FORCE	837-6566	
DESCRIPTION	PART NO.	
171-5610	SHEET 8 OF 8	